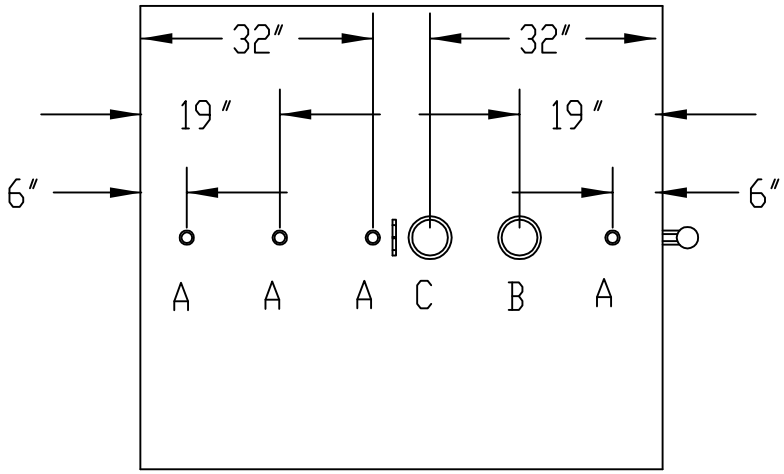

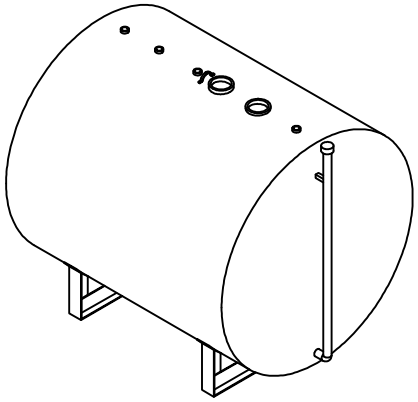

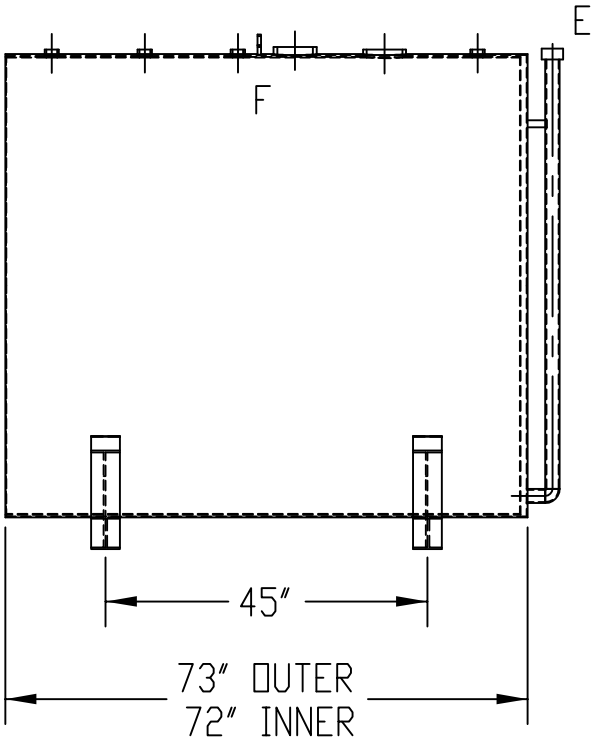

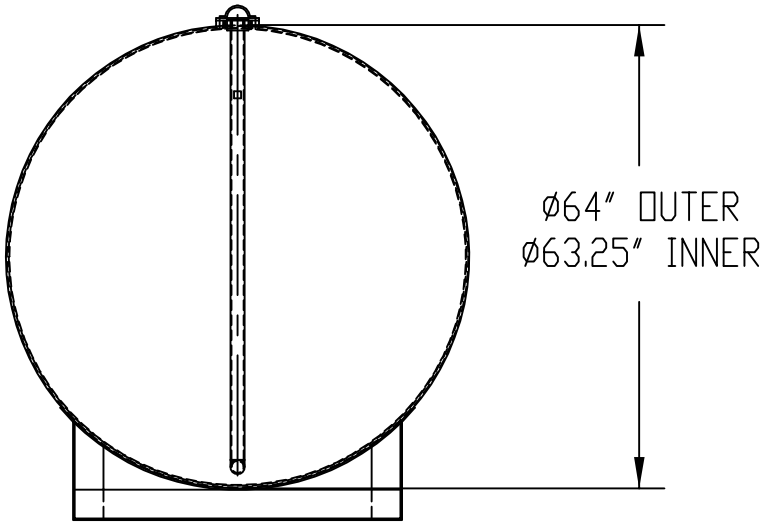

DESCRIPTION:	ABOVE GROUND, DOUBLE WALL, STEEL STORAGE TANK 1000 GALLONS	REF. TO:
		DATE:
MATERIAL:	10 GA. INNER/12 GA. OUTER	TITLE: ASDW 1000/64-10P
CONSTRUCTION:	WELDED USING UL-142 STANDARDS	
OPENINGS:	4-2″ CPLS 1-6″ INNER E.VENT CPL 1-6″ OUTER E.VENT FLANGE	
FINISH:	SURFACE PREP: SPCC SP-3 ONE SPRAY COAT OF RED PRIMER	SIZE: A LEGEND: A - 2″ FLANGE B - 6″ INNER E.VENT CPL C - 6″ OUTER E.VENT FLANGE D - 2″ INSPECTION PIPE E - FORGED LIFT LUG
TURNER TANKS: GOLDSBORO, NC (919) 734 - 8328		SCALE: 1:24 APPROVAL: