QUAN.	STOCK #	DESCRIPTION	QUAN.	STOCK #	DESCRIPTION	QUAN.	STOCK #	DESCRIPTION

SPECIFICATIONS & CONSTRUCTION INFORMATION

MODEL: AU-100046-10 UTILITY TANK
DESCRIPTION: ABOVEGROUND, SINGLE WALL STEEL STORAGE TANK
TANK: 10 GA.
OPENINGS: MINIMUM 3-2" FNPT FLANGE
1-4" FNPT FLANGE
1-6" FNPT FLANGE FOR EMERGENCY VENT
1-1-1/2" OUTLET W/ STEEL PLUG
CONSTRUCTION: PER UL-142 STANDARDS
FINISH: SURFACE PREP: SPCC SP-3
ONE SPRAY COAT OF RED PRIMER
FINISH ENAMEL COAT IS OPTIONAL

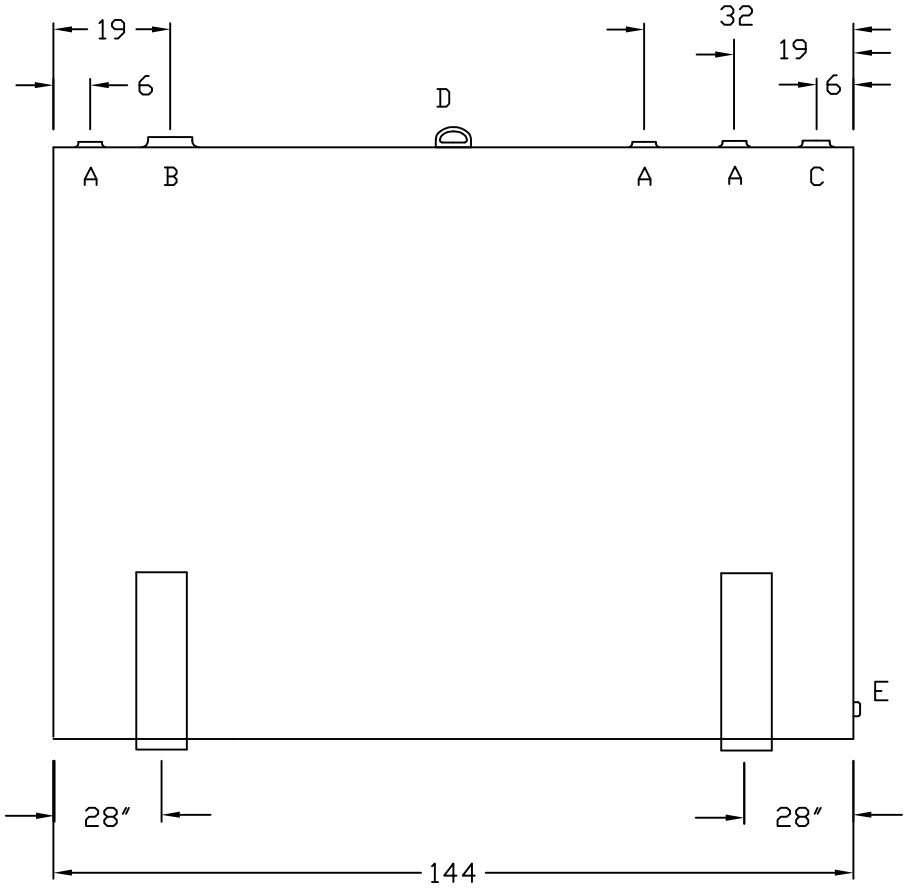

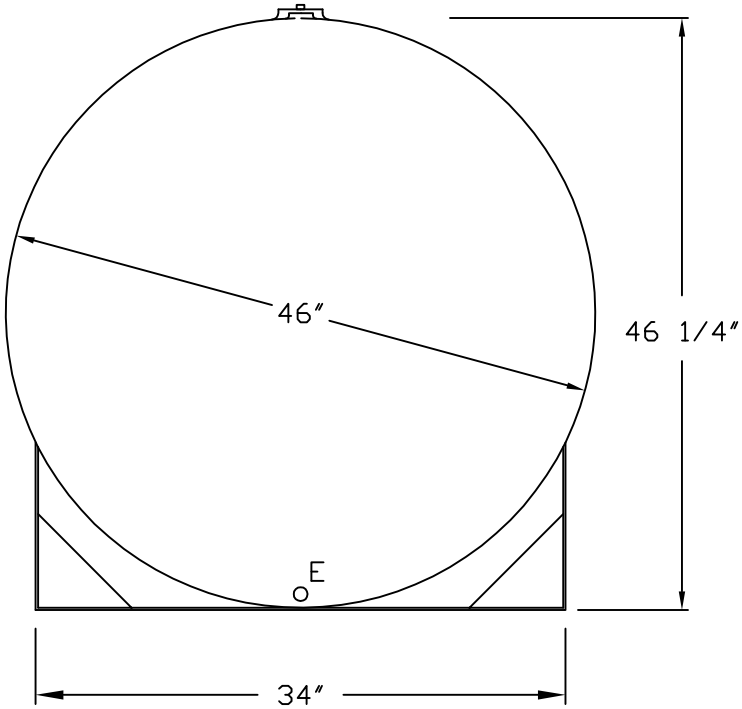

LEGEND

A - 2" FNPT FLANGE FOR FILL, GAUGE, AND NORMAL VENT
B - 6"FNPT FLANGE FOR EMERGENCY VENTING
C - 4" FNPT FLANGE FOR FILL
D - LIFTING LUG
E - 1-1/2" FNPT FLANGE W/ STEEL PLUG

TURNER TANKS AU-100046-10

GOLDSBORO, NC
1-919-734-8328

DWG #: AU-100046-10	SCALE: NONE	DATE: 12/18/06	REVISION:	APPROVED:	APPROVAL DATE: